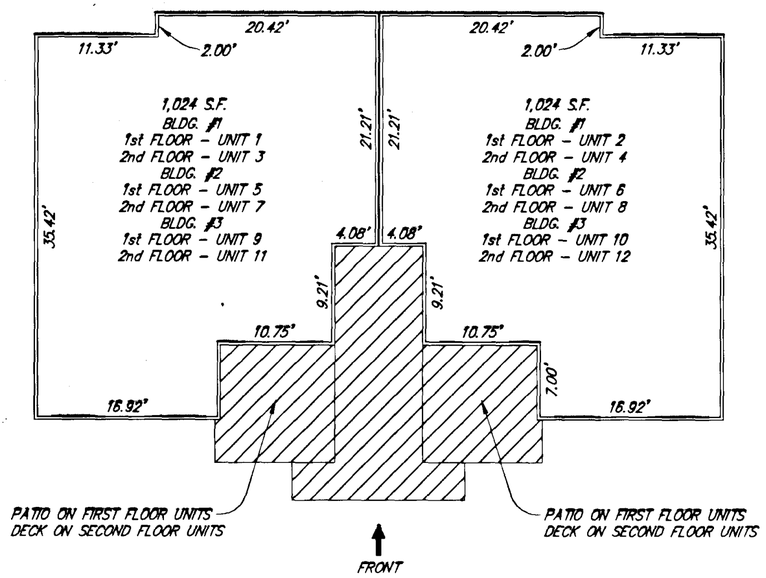

TYPICAL BUILDING - PLAN VIEW

SCALE: 1" = 10'

LEGEND	
	LIMITED COMMON AREA
	GENERAL COMMON AREA
↑	ORIENTATION OF PLAN VIEW
S.F.	SQUARE FEET

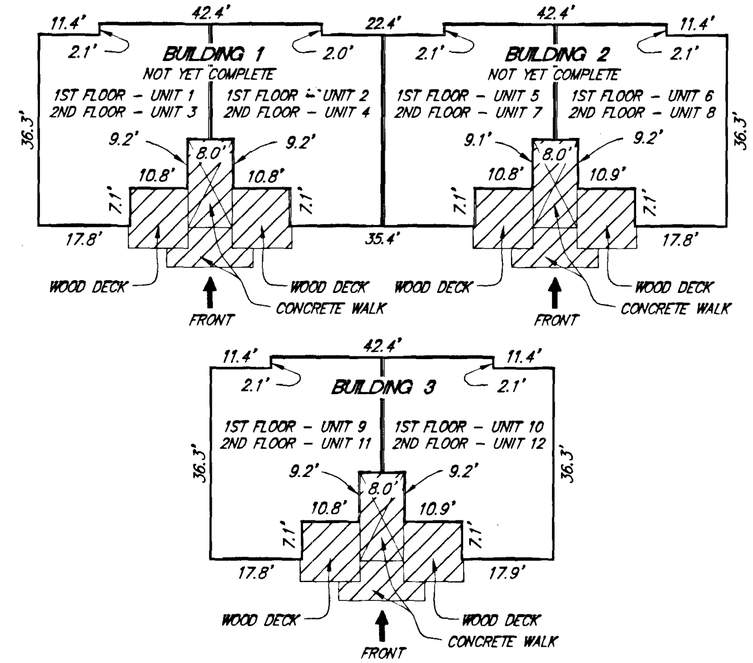

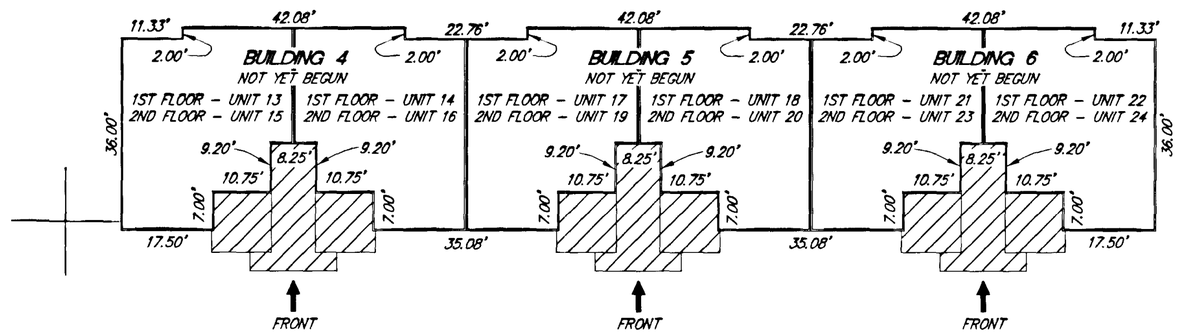

UNIT LAYOUT & EXTERIOR DIMENSIONS

SCALE: 1" = 20'

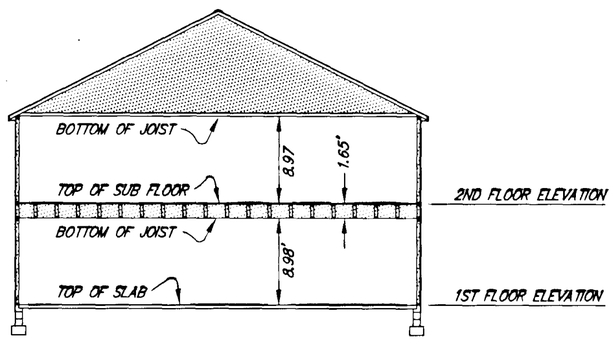

TYPICAL BUILDING SECTION

SCALE: 1" = 10'

FLOOR ELEVATIONS

BUILDING	FLOOR	REFERENCE POINT	ELEVATION
1	FIRST	TOP OF SLAB	1068.95'
	SECOND	TOP OF SUB-FLOOR	1079.53'
2	FIRST	TOP OF SLAB	1071.71'
	SECOND	TOP OF SUB-FLOOR	1082.35'
3	FIRST	TOP OF SLAB	1072.04'
	SECOND	TOP OF SUB-FLOOR	1082.70'

NOTES:

1) INCLUDED AS PART OF EACH UNIT IS THE DRY WALL COVERING ENCLOSING SUCH UNIT. ALL INTERIOR DIMENSIONS SHOWN ON THIS PLAT ARE MEASURED TO THE INSIDE FACE OF STUDS OR TO THE INSIDE FACE OF CONCRETE FOUNDATION WALLS.
2) ALL VERTICAL DIMENSIONS ARE MEASURED FROM SUB-FLOOR TO BOTTOM OF JOISTS.
3) UNIT DIMENSIONS SHOWN ARE TYPICAL AND ARE BASED UPON THE MEDIAN OF FIELD MEASUREMENTS OF ALL UNITS. SUBSTANTIALLY ALL DIMENSIONS FALL WITHIN A TOLERANCE OF 0.08 FEET OF THOSE SHOWN.
4) UNIT FLOOR AREAS ARE BASED ON THE BUILDING PLANS AND ARE WITHIN 2% OF THE ACTUAL FLOOR AREAS.

ENGINEER'S CERTIFICATE

I, B. LEE HENDERSON, JR., A REGISTERED ENGINEER IN THE COMMONWEALTH OF VIRGINIA, HEREBY CERTIFY THAT THIS PLAN, EXHIBIT "A", ACCURATELY SHOWS THE UNITS DELINEATED AND COMPLIES WITH THE PROVISIONS OF SECTION 55-79.58 PARAGRAPH (B) OF CONDOMINIUM ACT. I FURTHER CERTIFY THAT UNLESS NOTED OTHERWISE ALL UNITS DEPICTED HEREON HAVE BEEN SUBSTANTIALLY COMPLETED.

GIVEN UNDER MY HAND THIS 17TH DAY OF APRIL, 2000.

B. Lee Henderson, Jr.

B. LEE HENDERSON, JR., P.E.

COMMONWEALTH OF VIRGINIA
4-17-00
B. LEE HENDERSON, JR.
No. 17591
PROFESSIONAL ENGINEER

PLAT OF

PHASE 12
"RIDGEWOOD FARM CONDOMINIUM"

PROPERTY OF

VAUGHN & JAMISON, LLC

SITUATE ON TRACT 2 (P.B. 5, PG. 111)

CITY OF SALEM, VIRGINIA

SCALE: AS SHOWN DATE: 12 APRIL 2000

LUMSDEN ASSOCIATES, P.C.
ENGINEERS – SURVEYORS – PLANNERS
ROANOKE, VIRGINIA

COMM. #98-278C
SHEET 2 OF 2